HSO13

The Rakon "Ground USO" HSO13 has a short-term stability (Allan Standard Deviation) of 8 x 10^{-14}, is in the 10^{-11} stability class over the temperature range of 0 °C to +50 °C and is available at 5 and 10 MHz. Its close-in phase noise @1 Hz is below -130 dBc/Hz for the 5 MHz product.

The 'Ground USO' HSO13 is specially designed to meet the request of the calibration and metrology laboratories that have high stability frequency standards but also the applications that require high performance reference oscillators like the ground stations.

Features

- Frequency: 5 or 10 MHz
- Short-term stability: 8 x 10^{-14} at 5 and 10 MHz
- Frequency stability: ± 5 x 10^{-11} over 0 to +50°C
- Supply voltage: 24 V (12 V available on request)
- Ageing: ±5 x 10^{-11} (±50 ppt) per day

Applications

- Master clocks
- Reference oscillator for laboratories
- Master clocks
- Ground stations

67 x 60 x 40 mm

PTH1

Highlights – Phase Noise Performance at 5 MHz

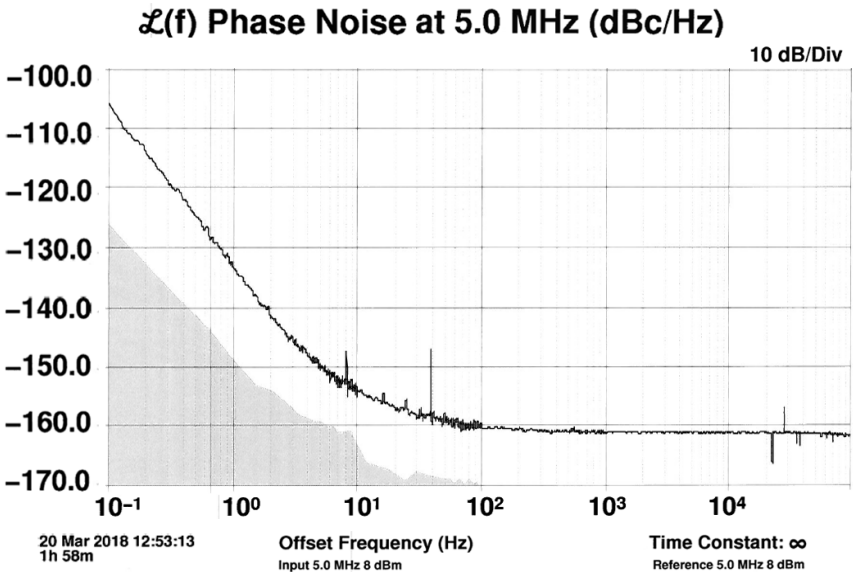

1. Environmental Conditions

Parameter	Min.	Typ.	Max.	Unit	Test Condition / Description
Operating temperature	0	25	50	°C	Max. 1 °C/hour
Non-operating temperature	0	25	50	°C	-
Storage temperature	0	-	50	°C	-
Frequency stability after mechanical shocks	-	-	±10	ppb	Half sine 30 g/11 ms
Frequency stability after sine vibrations	-	-	±5	ppb	10 – 500 Hz 10 g acceleration

2. Performance Data

Parameter	Min.	Typ.	Max.	Unit	Test Condition / Description
Nominal frequency (Fn)	-	5, 10		MHz	-
Relative pulling frequency range	±20	-	±50	ppb	With V_C tuning from 0 to 10 V
Power supply Steady state Warm-up	-	2.4 -	3 10	W	Typical 25°C Achieving 15 minutes after startup @ 25 °C
Frequency warm-up time	1	-	15 28	mn day	For frequency in the range Fn ± 1 ppm For full performance
Frequency stability vs. temperature	-	-	±50	ppt	-
Frequency variation vs. supply voltage (V_{CC})	-	-	±10	ppt	Vcc ± 1 % at 25 °C
Frequency variation vs. load	-	-	±20	ppt	For ±10% of load variation
Ageing	-	-	±50 ±1.5 ±10 ±50	ppt/day ppb/month ppb/year ppb/10 years	After a minimum of 21 days of continuous operation Ageing according to the MIL-PRF-55310 version C
g-sensitivity	-	-	±1	ppb/g	Quadratic sum
Output level	4	-	6	dBm	Output waveform: Sinewave
Harmonics	-	-	-40	dBc	-
Spurious	-	-	-70	dBc	-

3. Electrical Interface

Parameter	Condition / Remarks	Min.	Typ.	Max.	Unit
Power supply	24 V 12 V (available on request)	22.80 11.40	24 12	25.20 12.60	V
Load impedance	-	47.5	50	52.5	Ω
Reference voltage (V_{REF})	Output current: 0 to 1 mA max.	-	8	-	-

4. Short-term Stability Options and Phase Noise

ADEV Option	Remarks	Tau=1s	Tau= 3s – 30s	Frequency	1Hz	10Hz	100Hz	1kHz	10kHz
08	ADEV = 08E-14	1E-13	8E-14	5 MHz 10 MHz	-130 -123	-150 -141	-157 -143	-160 -143	-160 -143
10	ADEV = 10E-14	1E-13		5 MHz 10 MHz	-128 -121	-148 -141	-155 -143	-160 -143	-160 -143
15	ADEV = 15E-14	1.5E-13		5 MHz 10 MHz	-	-	-	-	-
20	ADEV = 20E-14	2E-13		5 MHz 10 MHz	-	-	-	-	-
25	ADEV = 25E-14	2.5E-13		5 MHz 10 MHz	-	-	-	-	-

5. Ordering Part Example

HSO13 PTH1 08 24V 5M

Product Family
HSO = High Stability Oscillator
13 = Short-term stability class

Package
PTH1 = Pin-through-hole, 60x67x40 mm

ADEV
08 = 08E-14
10 = 10E-14, **15** = 15E-14, **20** = 20E-14, **25** = 25E-14

Supply Voltage
24V = standard, **12V** = option

Frequency (Fn)
5M = 5 MHz, **10M** = 10 MHz

6. Model Outline and Pin Connections – PTH1 (pin-through-hole) Package

Parameter	Remarks
Package size	60 x 67 x 40 mm. SMA1 (SMA + DE-9P) package
Net weight	350 g typ.
STEP file	HSO13 3D model *To open or view the STP file, you will need to import it into one of the following software programs: Autodesk Fusion 360, CATIA, SolidWorks, Solid Edge, TurboCAD, Kubotek KeyCreator, FreeCAD, ABViewer, ShareCAD, or eMachineShop.*

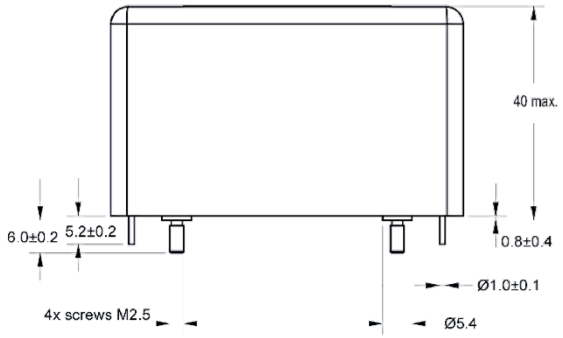

FRONT VIEW

Pin	Function
1	Output Signal
2	Output Reference voltage
3	Mechanical ground and (-) supply
4	Input Frequency Control
5	Input supply (+)
6	Oven Alarm (Option)
7	Reserved SCL (Do not connect)
8	Reserved SDA (Do not connect)

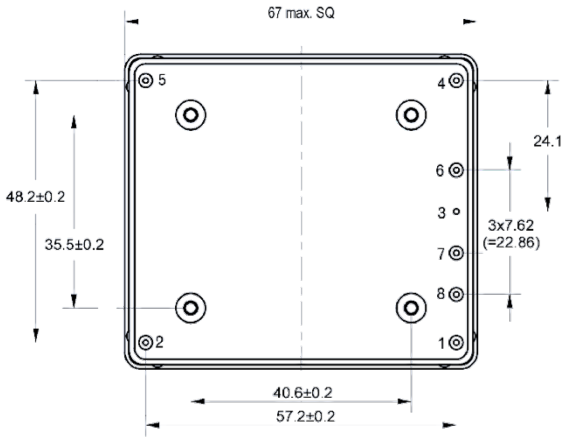

BOTTOM VIEW

NOTE:
Unit is mm.
General tolerance ±0.2 mm.